JEE-O slimline wall basin mixer specifications

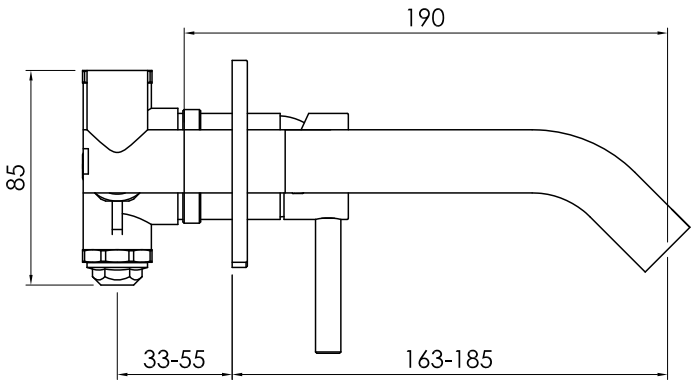

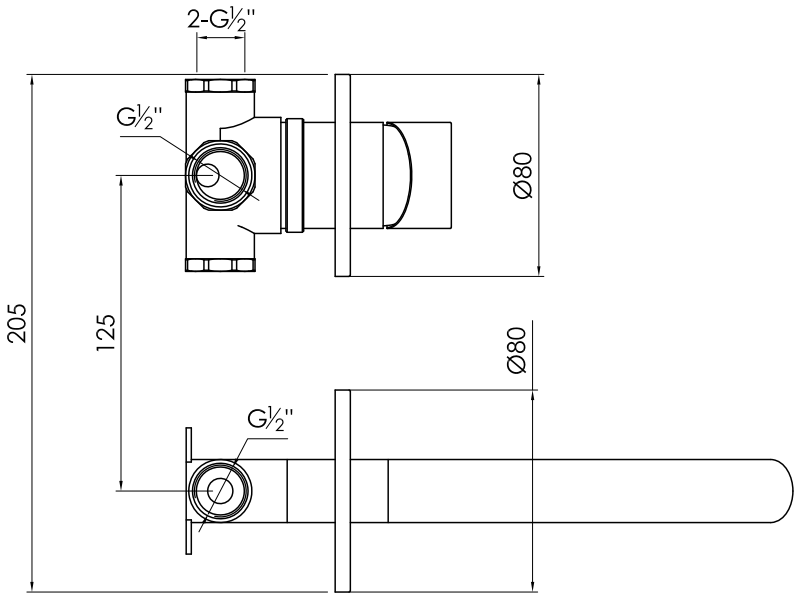

Note:
UV radiation and extreme temperature can affect the color and structure of the surface of the structured black version.

Article code:	**800-1500** brushed stainless steel **800-1503** stuctured black stainless steel **800-1504** bronze stainless steel	Connection: Thread:	2 x G ½" (ø15mm / 0.6") British Standard Pipe (BSP)
		Dimension package: Total weight: Package weight:	L 26 x W 27 x H 17cm 2.2 kg 0.82 kg
		2 year warranty	
Material:	Stainless Steel r304		
Cartridge:	Sedal ceramic mixing mechanism (35mm), item code **005-0101**		
Cleaning:	JEE-O protect	HS code:	84818011900
Flow at water of 38°C /100,4°F:	10l /2.7gal p/m at 3bar pressure	Approvals:	SLS BS EN 817

Models are subject to change and specs may contain typographical errors.